MEDALLION–LOK

EAVE DRIP TRIM DETAIL

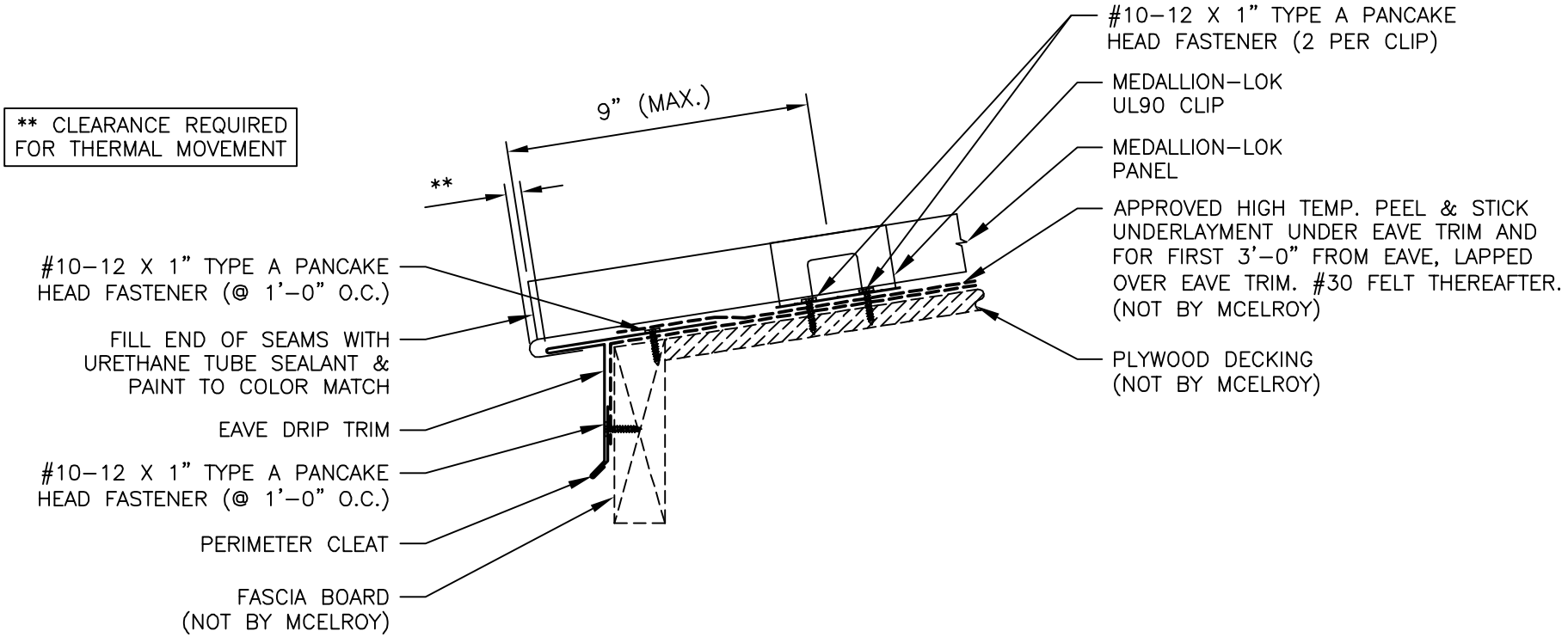

McELROY METAL, INC.

DATE CREATED: 06/30/08