MAXIMA 1.5"
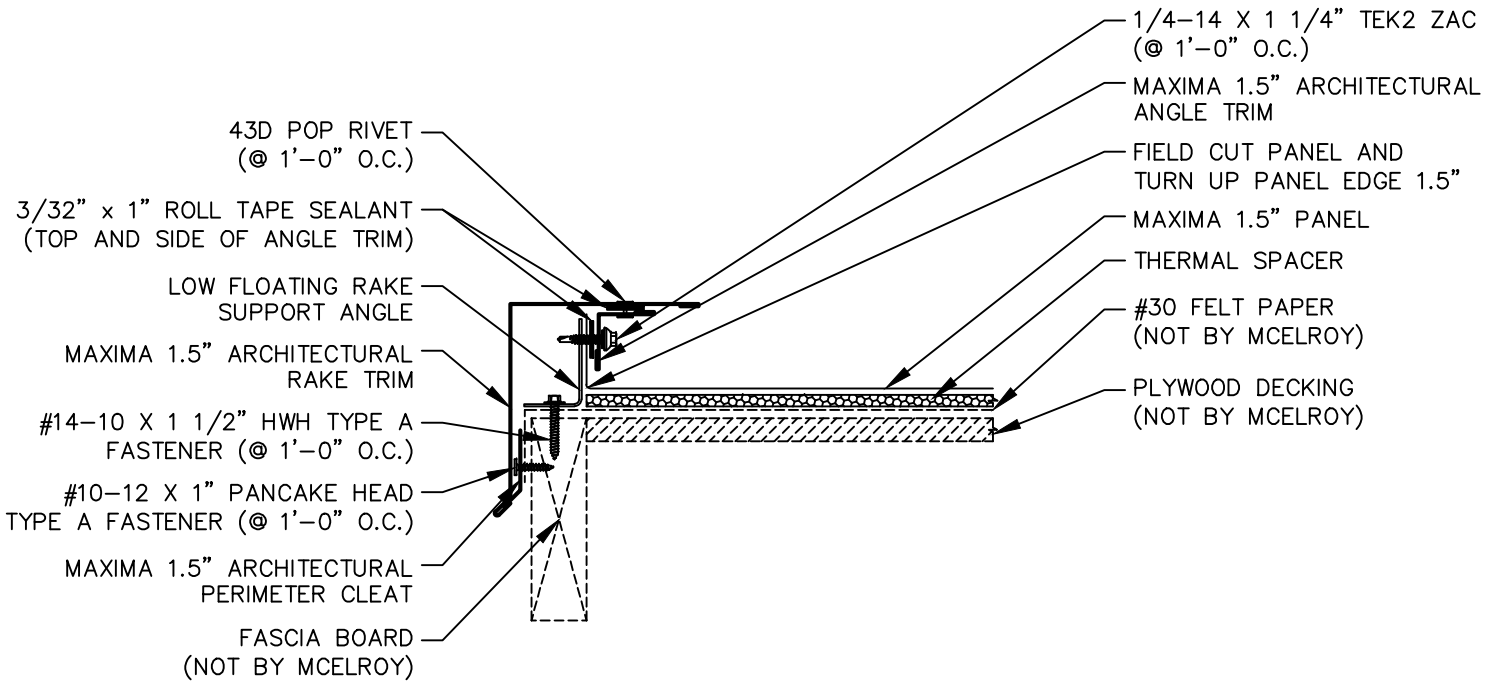
RAKE DETAIL (PANEL TURN UP)