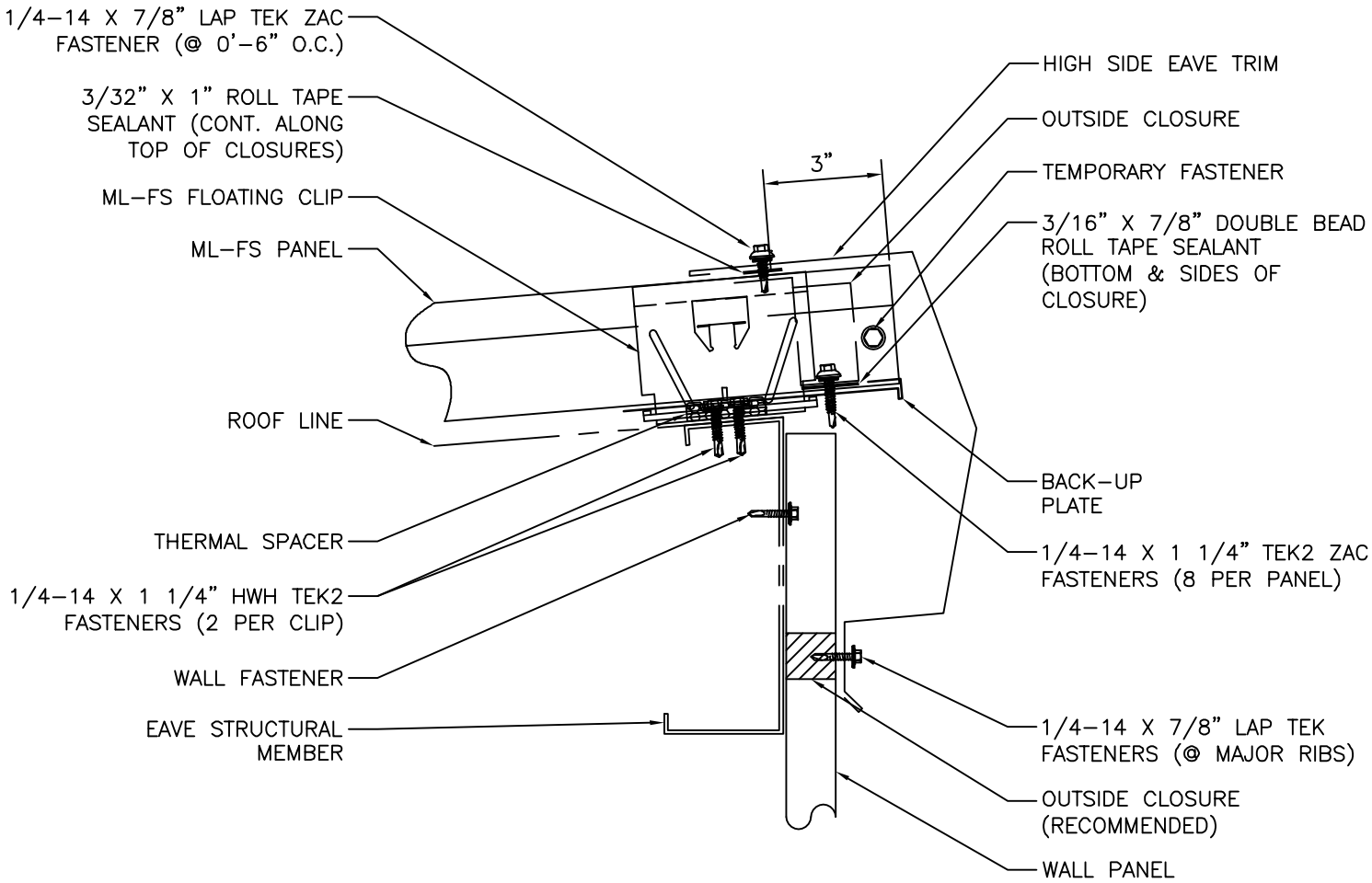

McELROY METAL

HIGH SIDE EAVE DETAIL

ISSUE/REVISION DATE: 06/11/2020

ROOF PANEL: MASTERLOK FS

SUBSTRATE: PURLIN

SCALE: N.T.S.