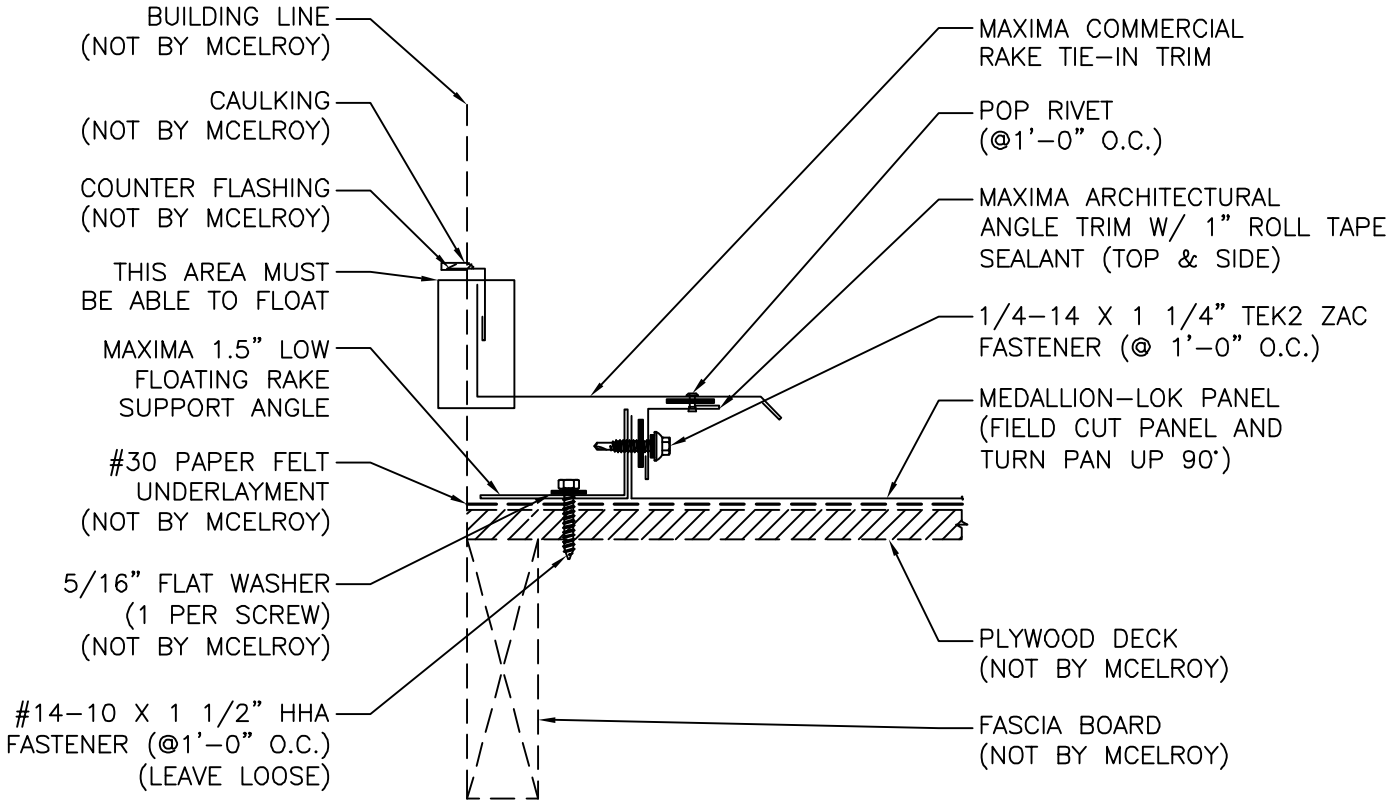

McELROY METAL

FLOATING RAKE TIE-IN DETAIL

ISSUE/REVISION DATE: 06/17/2020

ROOF PANEL: MEDALLION-LOK

SUBSTRATE: PLYWOOD

SCALE: N.T.S.