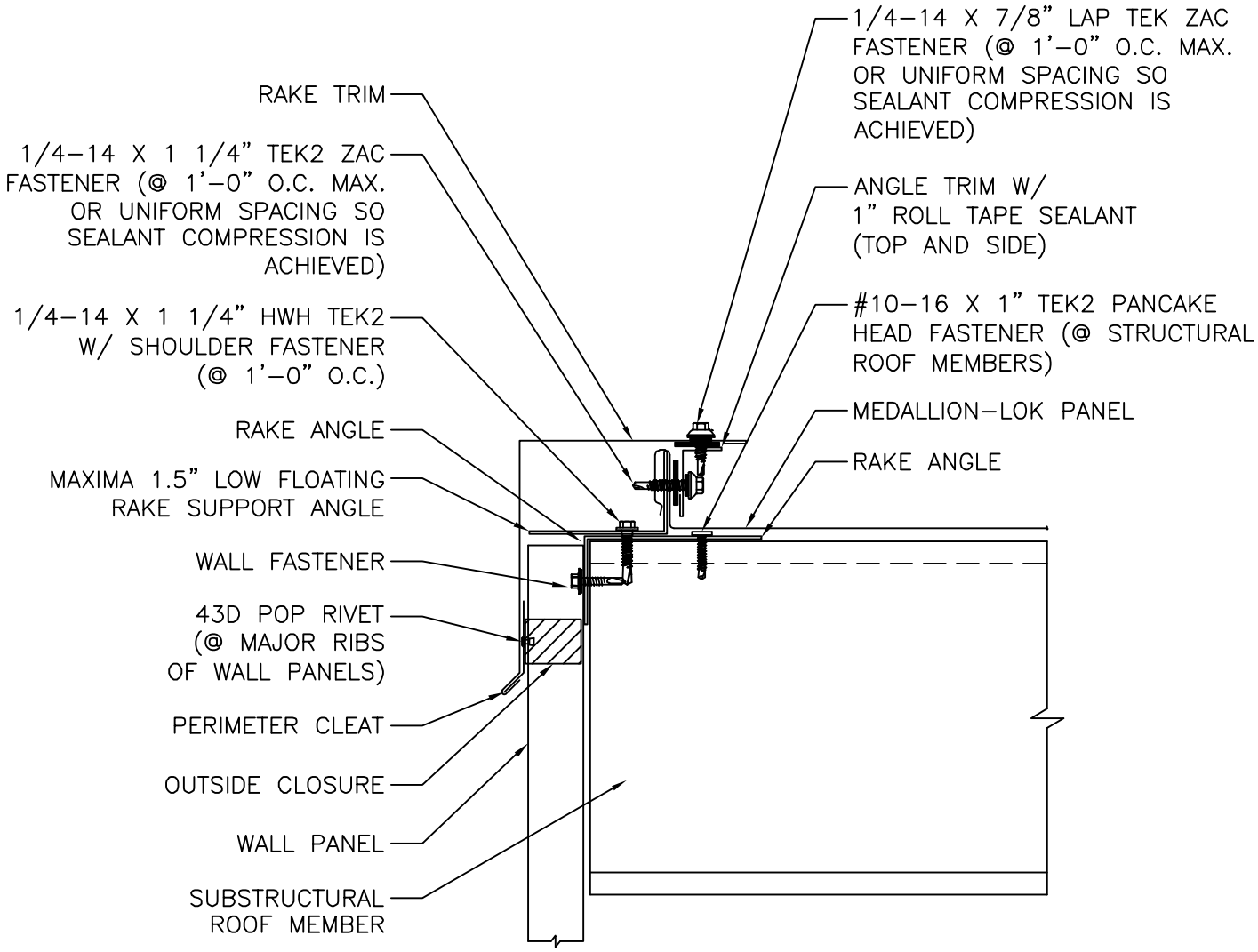

McELROY METAL

FLOATING RAKE DETAIL

ISSUE/REVISION DATE: 06/17/2020

ROOF PANEL: MEDALLION-LOK

SUBSTRATE: PURLIN

SCALE: N.T.S.