MAXIMA ADV

HI-SIDE TIE-IN DETAIL (ALT.)

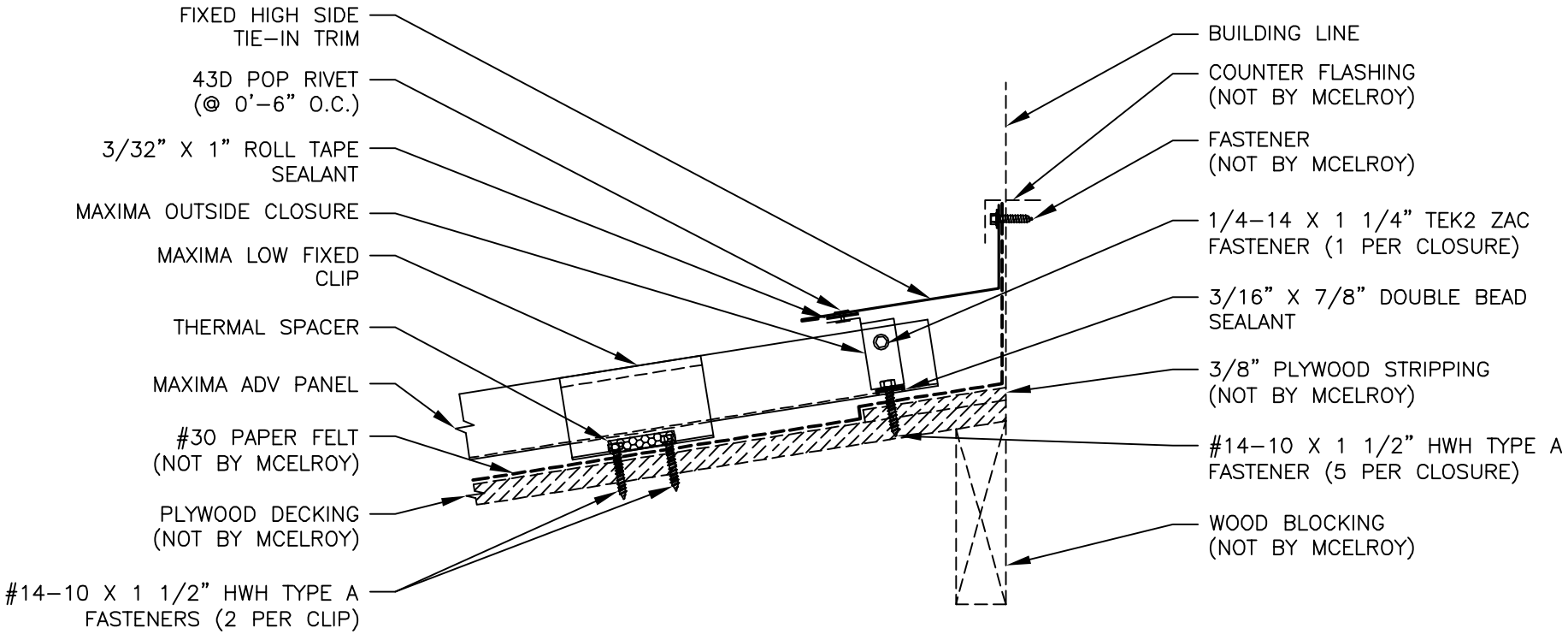

McELROY METAL, INC.

DATE CREATED: 03/05/08