RIDGE DETAIL (VENTED) (ALT.)
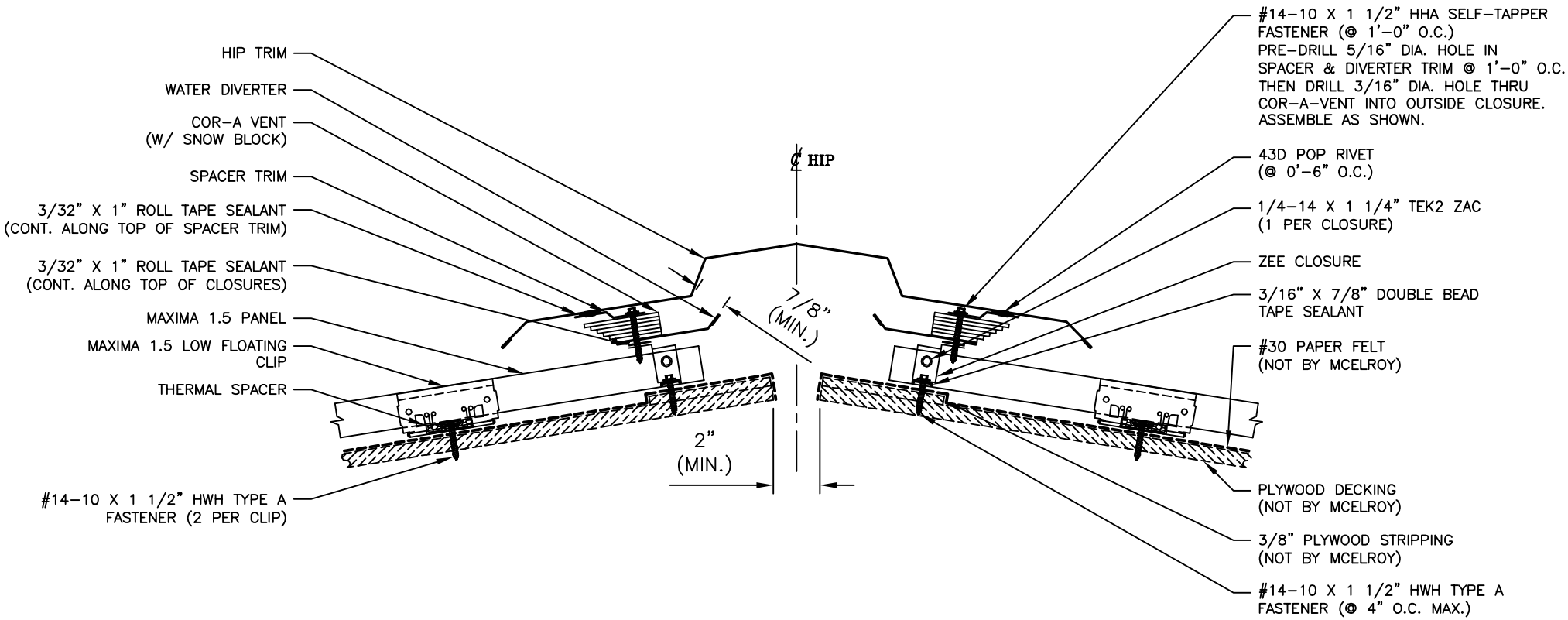
NOTE:
COR–A–VENT MAY BE USED ON ROOF SLOPES OF 3:12 – 16:12. ANYTHING GREATER THAN 16:12, PLEASE REFER TO COR–A–VENT'S WEBSITE.
CUSTOMER MUST SPECIFY WHAT SIZE & TYPE OF COR–A–VENT TO USE.