MAXIMA 3”

END LAP DETAIL

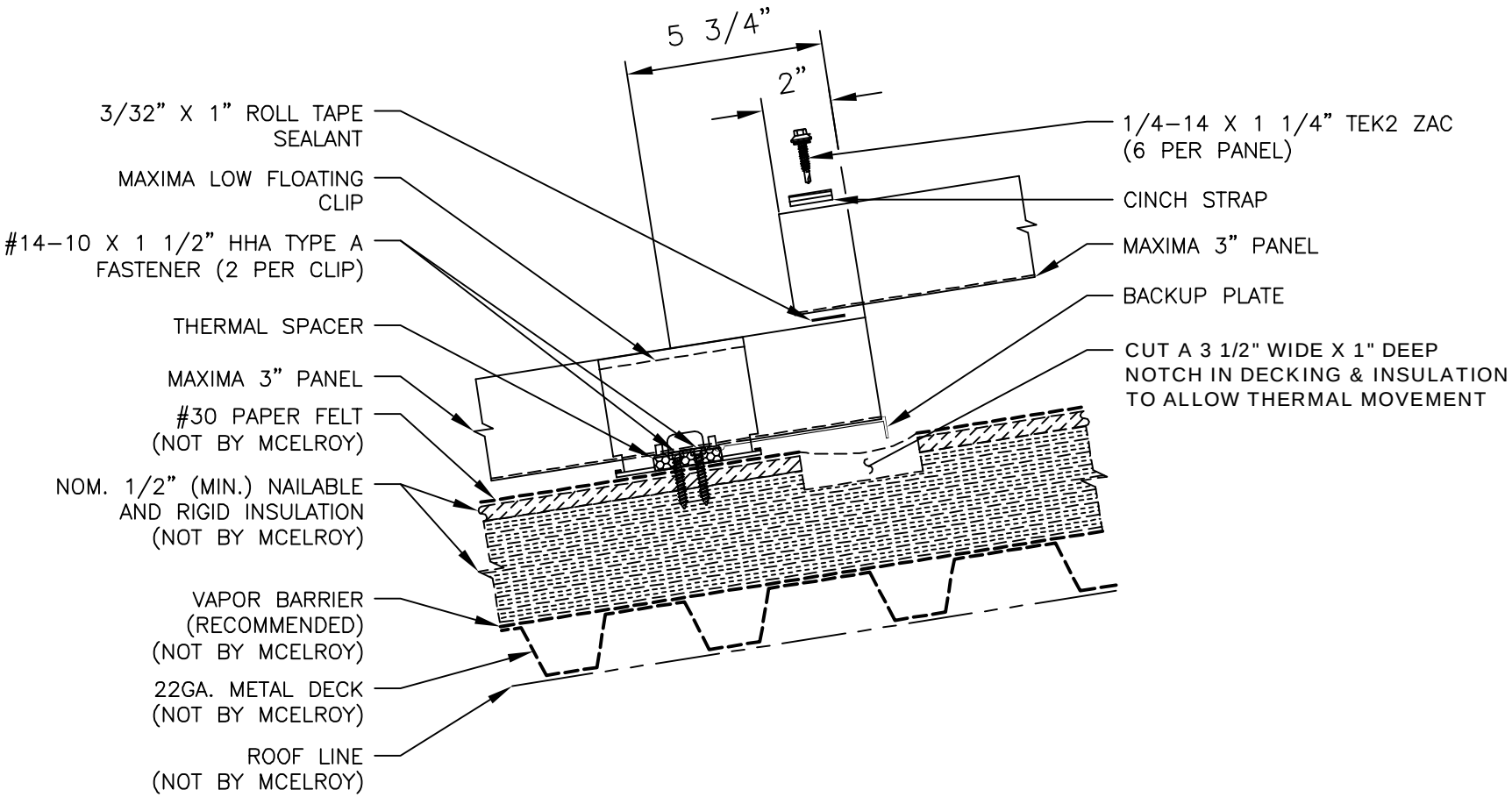

McELROY METAL, INC.

DATE CREATED: 03/11/08