# VALLEY DETAIL (FLOATING)
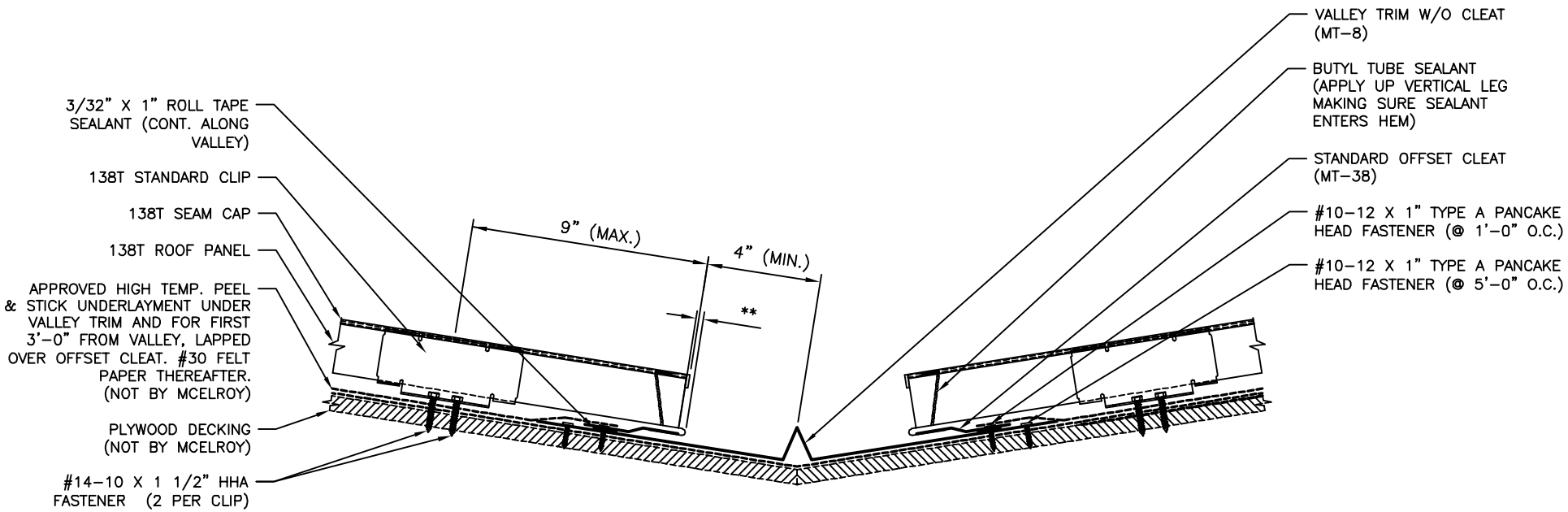
** CLEARANCE REQUIRED FOR THERMAL MOVEMENT