238T

RIDGE DETAIL (FIXED)
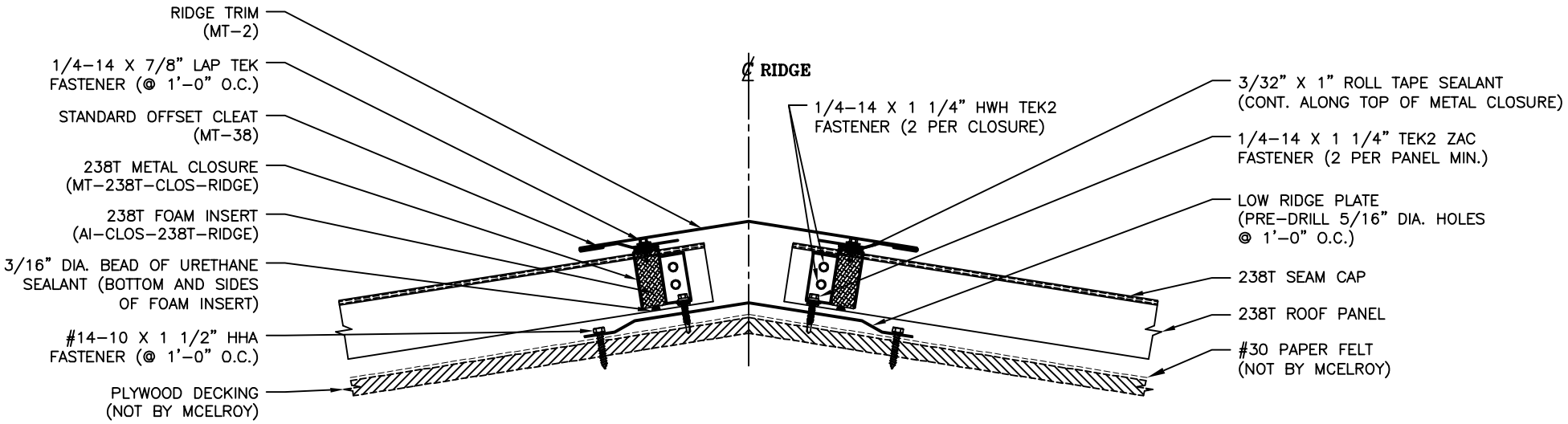
SLOPES LESS THAN 3:12 WILL REQUIRE THE PAN OF THE PANEL TO BE FOLDED UP.