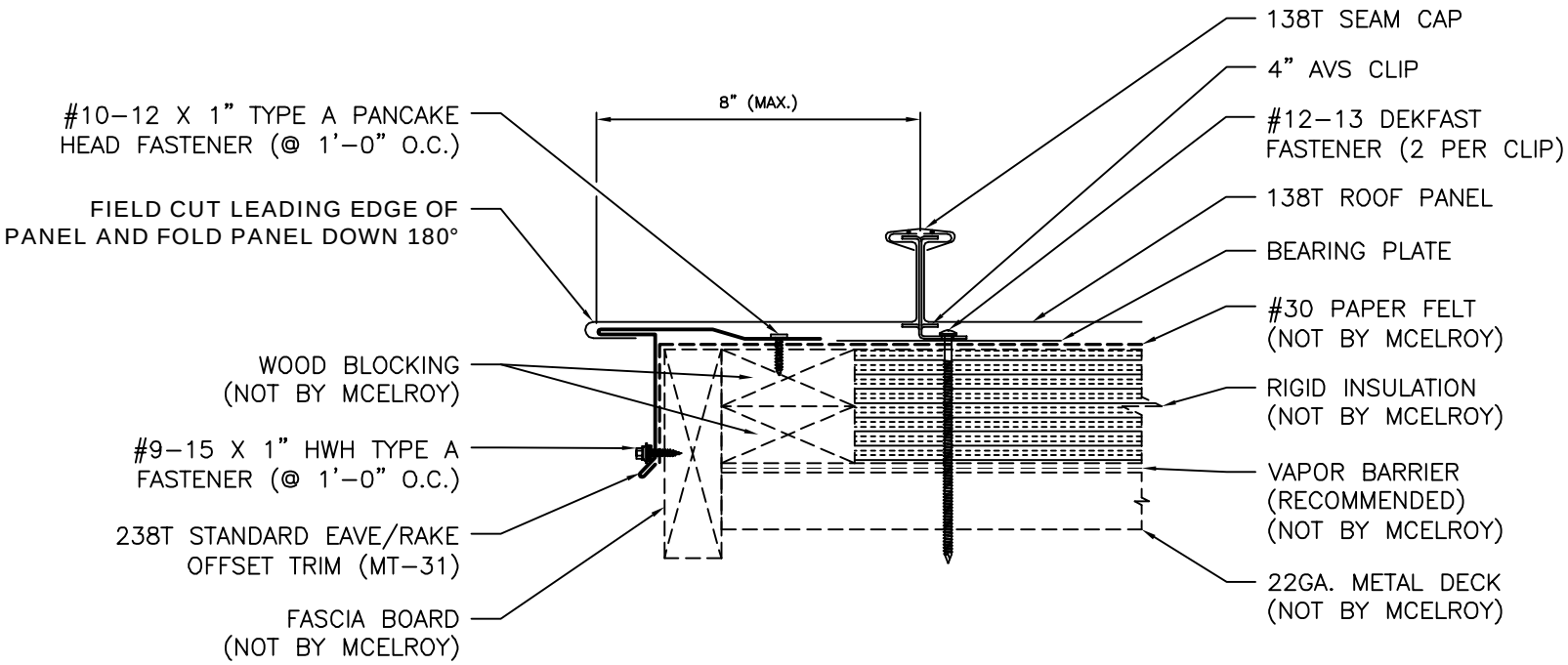ALTERNATE RAKE DETAIL (FLOATING)