238T

EAVE w/ GUTTER DETAIL

** CLEARANCE REQUIRED FOR THERMAL MOVEMENT

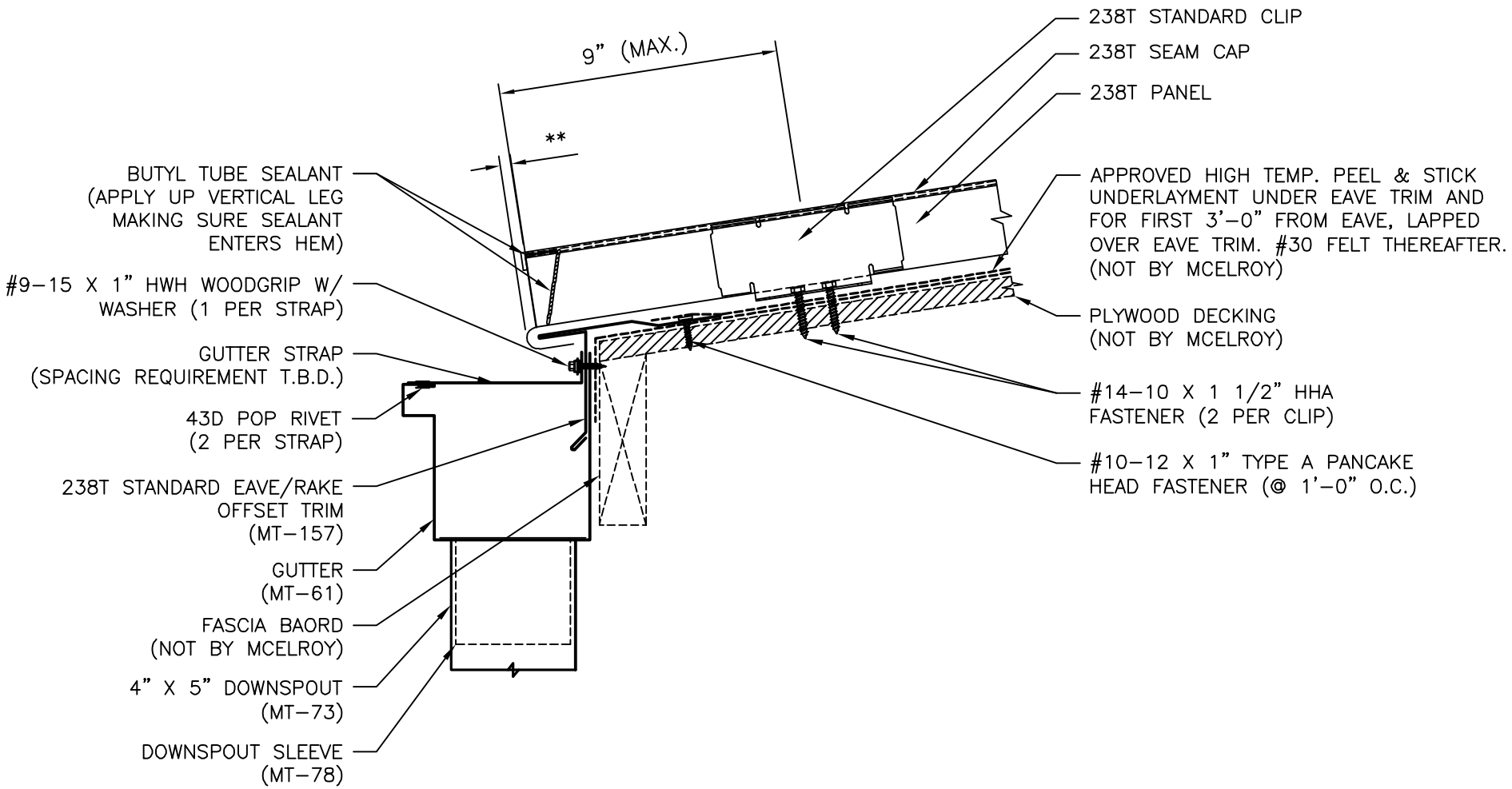

MCELROY METAL

DATE CREATED: 11/5/18