238T

EAVE DETAIL

** CLEARANCE REQUIRED FOR THERMAL MOVEMENT

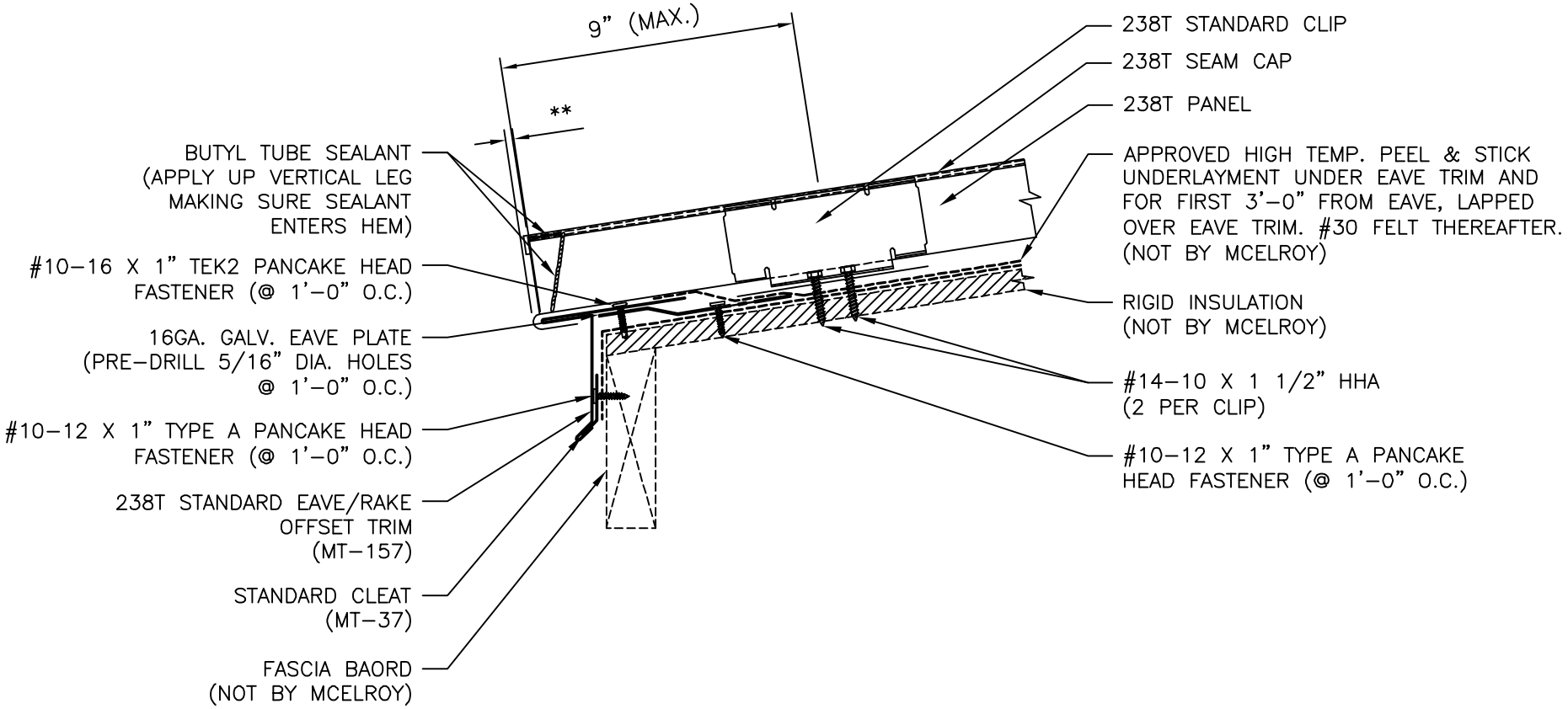

MCELROY METAL

DATE CREATED: 11/5/18