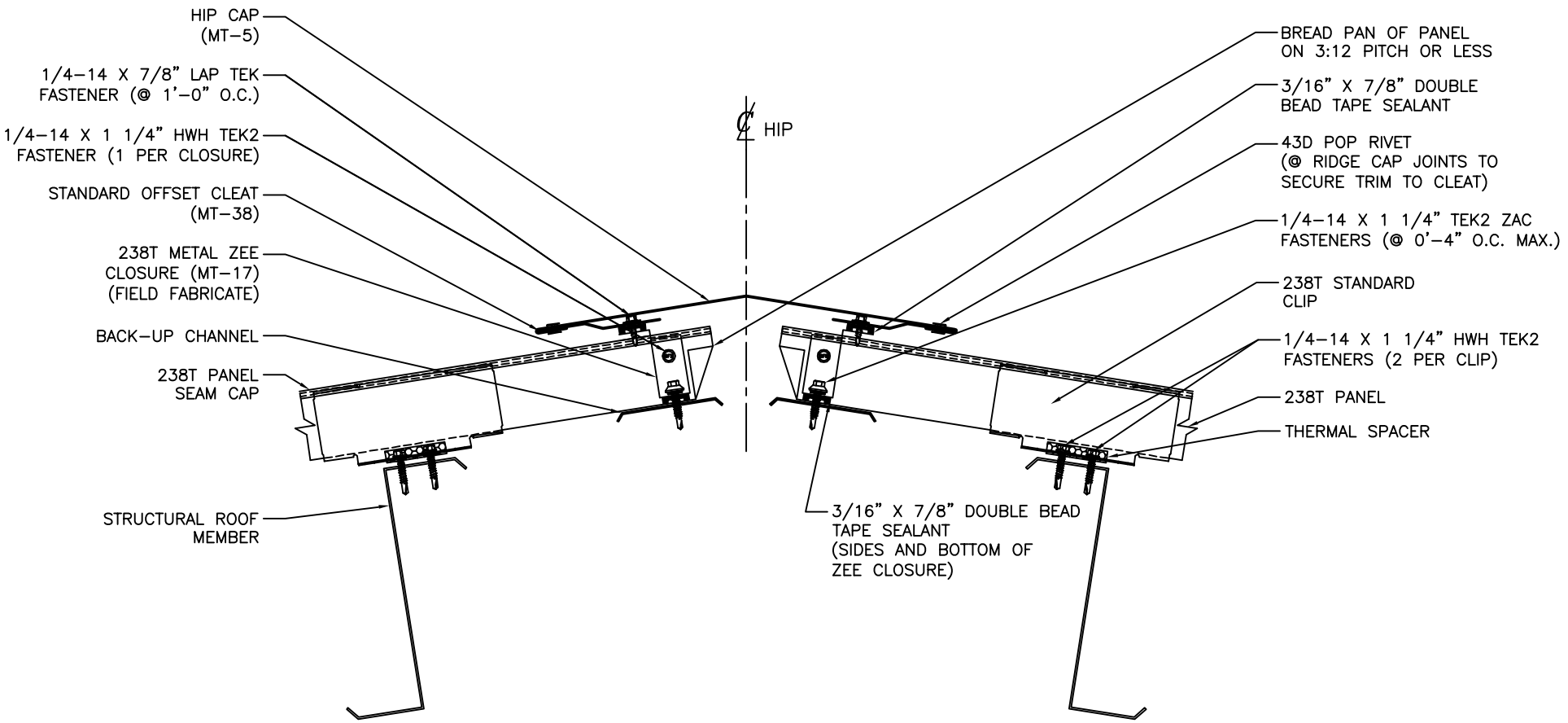

McELROY METAL

FIXED HIP (STANDARD CLIPS)

ISSUE/REVISION DATE: 02/01/2016

ROOF PANEL: 238T

SUBSTRATE: PUBLIN

SCALE: N.T.S.