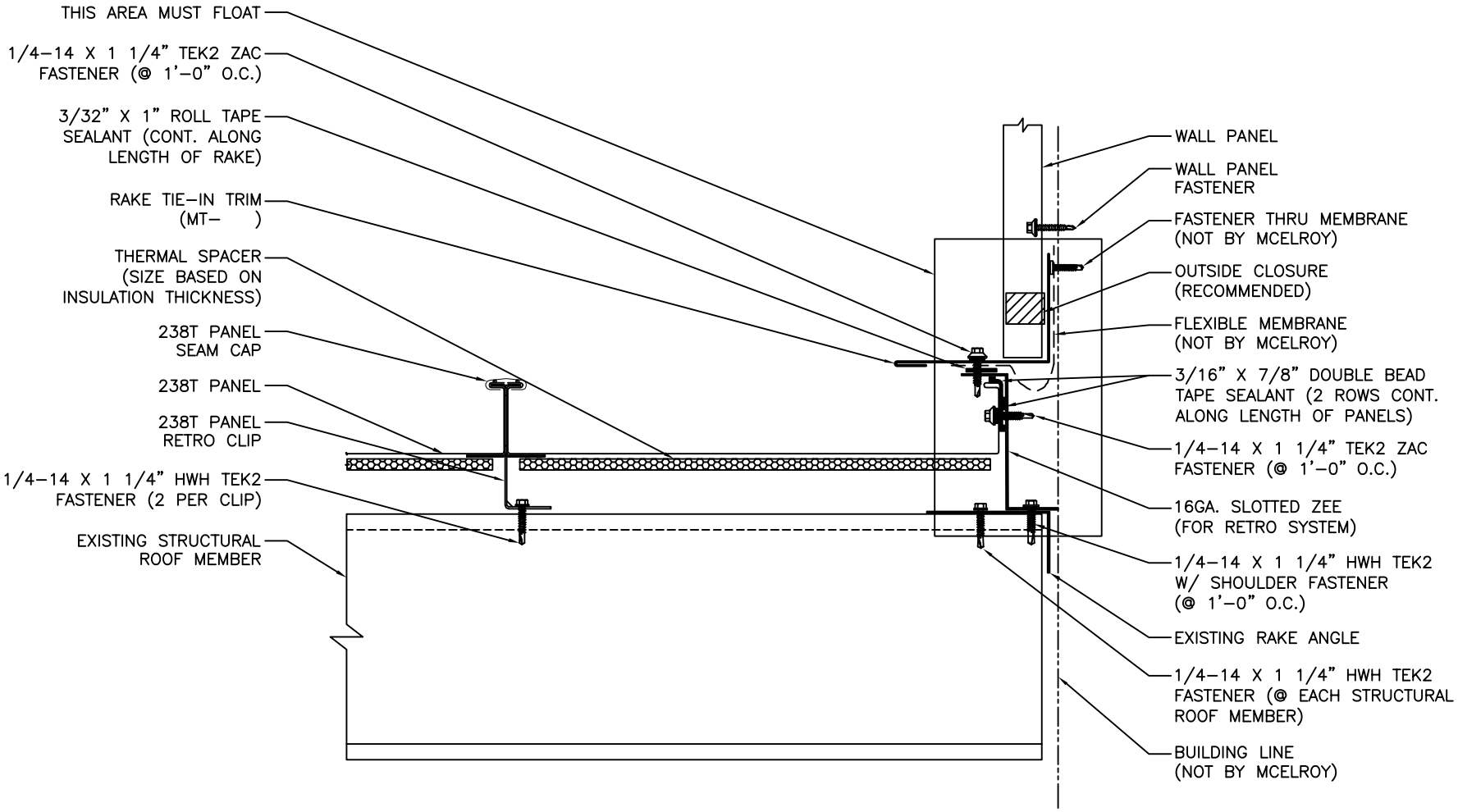

INSULATION REMOVED FOR CLARITY OF DETAIL

McELROY METAL

FLOATING RAKE TIE-IN (RETRO CLIPS)

ISSUE/REVISION DATE: 02/01/2016

ROOF PANEL: 238T

SUBSTRATE: PURLIN

SCALE: N.T.S.