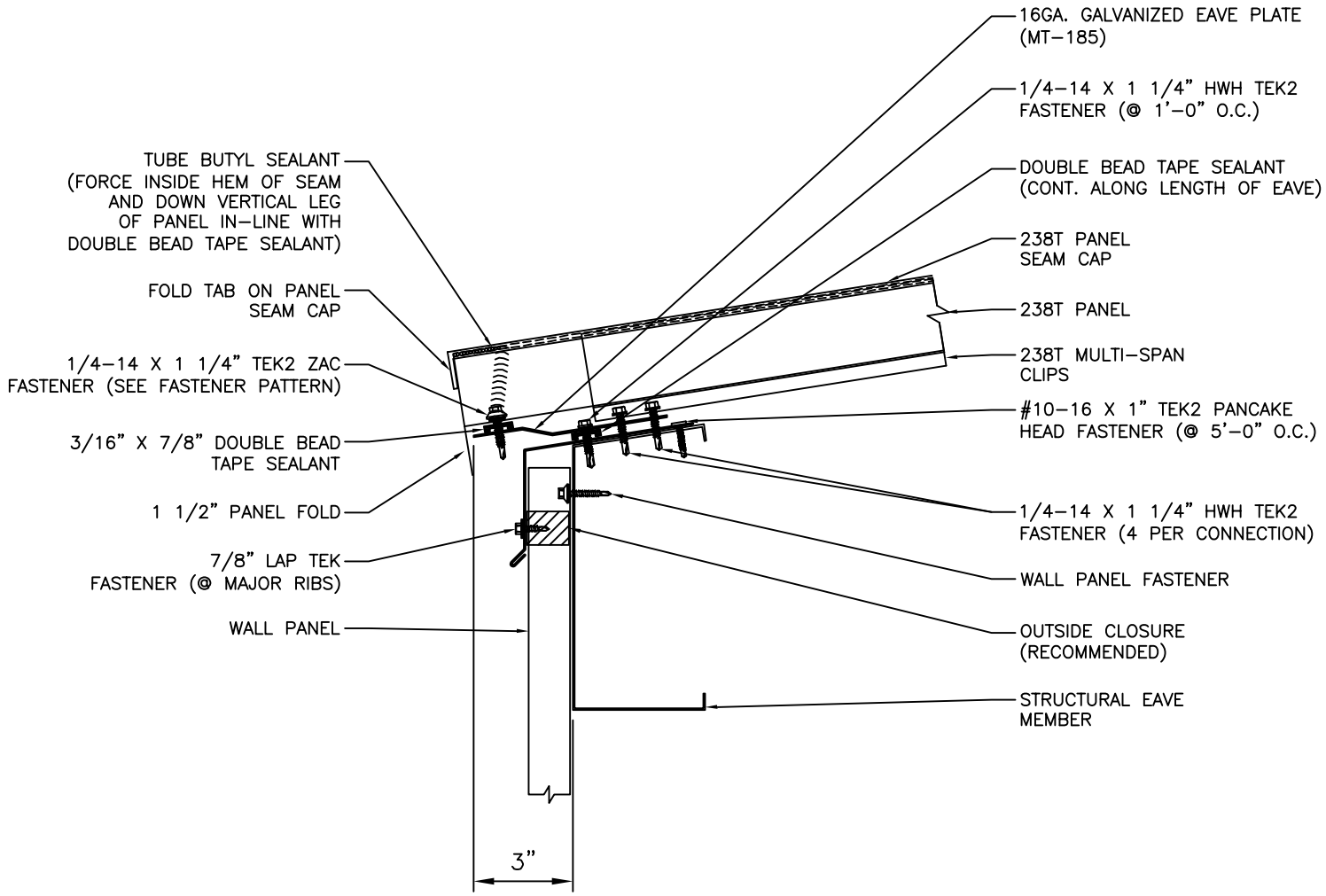

McELROY METAL	EAVE (MULTI-SPAN CLIPS)	ISSUE/REVISION DATE: 02/01/2016
	ROOF PANEL: 238T / SUBSTRATE: PURLIN	SCALE: N.T.S.